SUPPORT DE PRISE VERSO VINTAGE

Built-in socket

Code: A000 A17

SUPPORT DE PRISE VERSO VINTAGE

DETAILS

Material	AISI 304 stainless steel
Texture	Vintage
Built-in hole	215x88 mm
Notes:	It's advisable to keep a distance of 40 cm from sinks or cooking hobs (protection index IP20)

FEATURES

VINTAGE	The Vintage finish gives the product a long-lived and elegant look, creating a surface that does not fear scratches.

TECHNICAL DATA

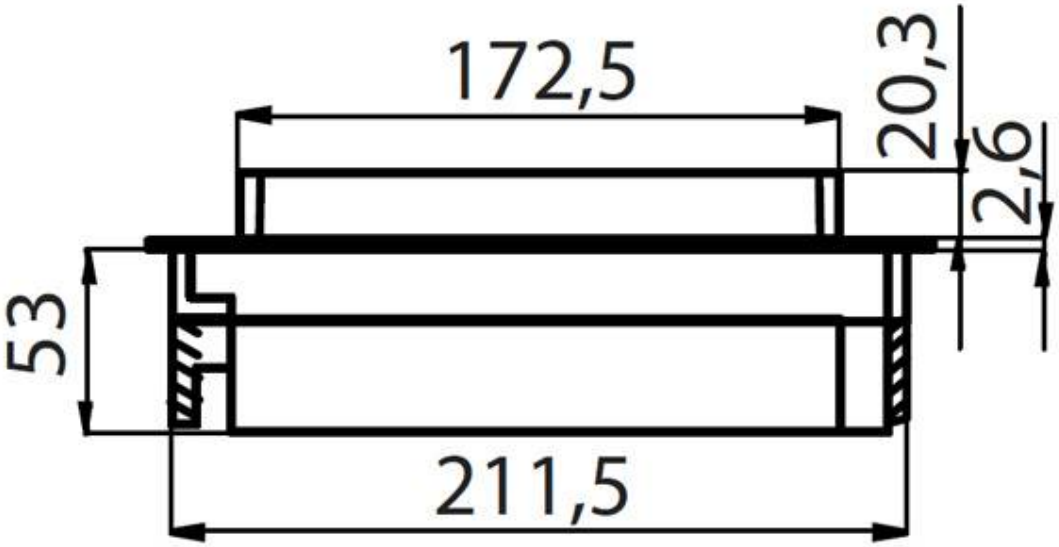
172,5
20,3
2,6
53
211,5

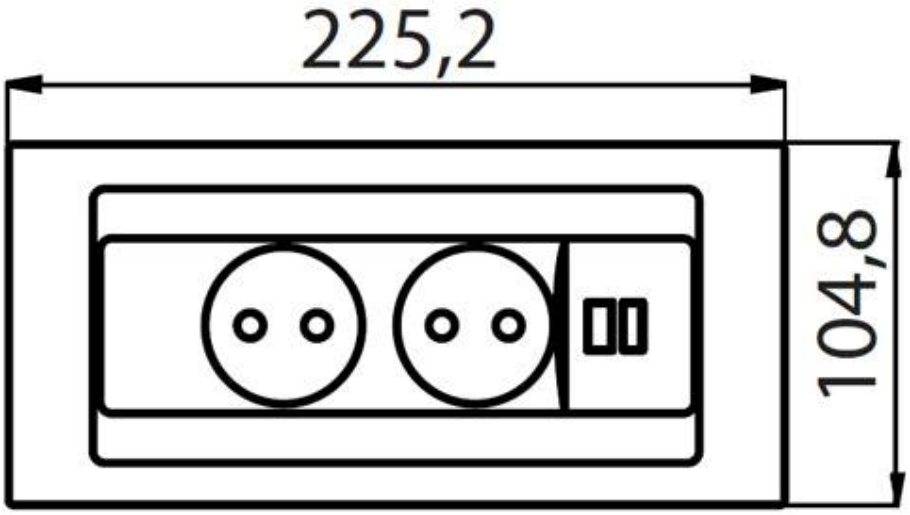
225,2
104,8

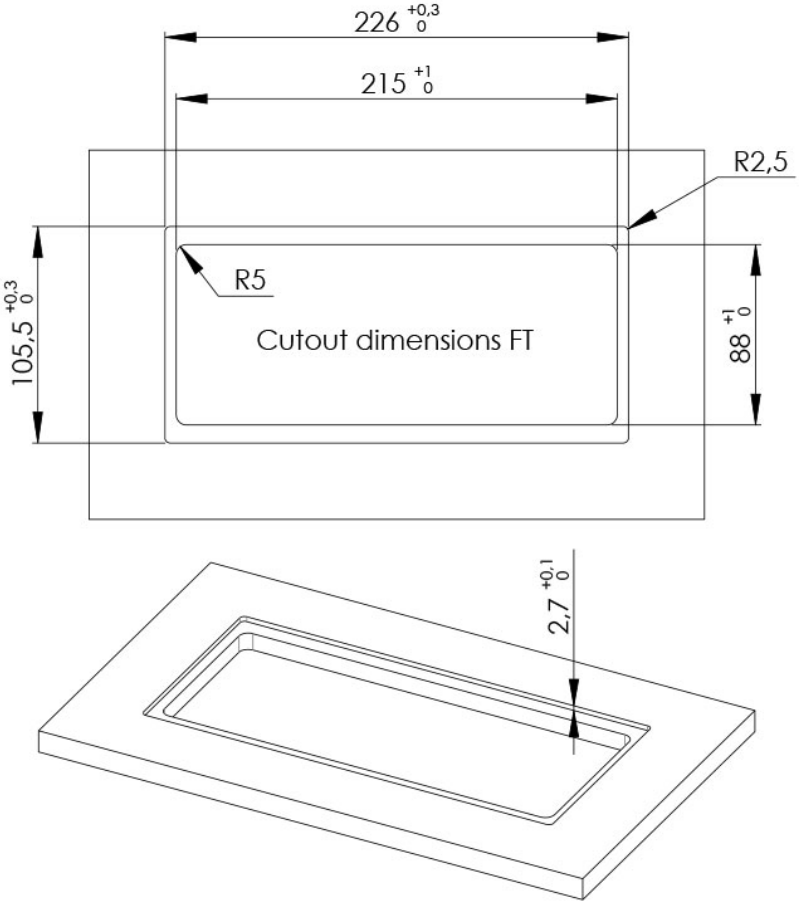
226 +0,3 0
215 +1 0
R2,5
R5
Cutout dimensions FT
105,5 +0,3 0
88 +1 0
2,7 +0,1 0

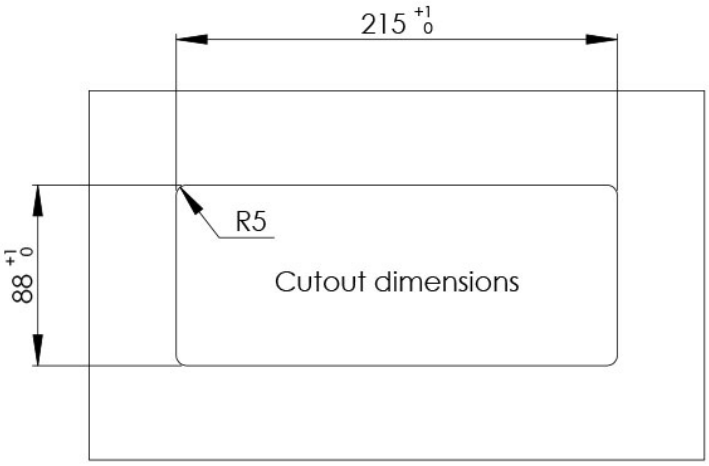
215 +1 0
R5
Cutout dimensions
88 +1 0
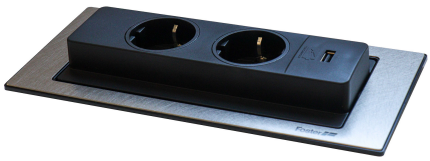
GALLERY